AMARA RAJA
Gotta be a better way



48V-100Ah, 4.8 kWh Lithium-ion Battery (LiFePO4)

Overview & Amaron LiB Benefits:

Amara Raja provides safe & Reliable lithium-Ion battery solutions with wide range of models for **Stationary & eMobility** applications.

- Quick charging
- Long cyclic life
- High specific energy / energy density
- Zero Maintenance
- Low footprint

Features:

- RS485 communication output for monitoring.
- Multi-level safety protection for overcharge, over discharge, short circuit, temperature etc.,
- Over current protection in charge/discharge.
- MOSFET high/low temperature protection.
- Passive cell balancing.
- Customized BMS functions and algorithms
- Data logging.
- SMART BMS - Provision for sleep mode.
- Protection for short Circuit & Reverse polarity.
- Anti-theft protection (Optional).

Certifications & Standard Compliance:

- IEC 62619
- IEC 62620
- IEC 61000
- UN38.3
- UL9540A

Specifications	Parameters
Model	AS0480048-V1
Nominal voltage	48V
Rated Capacity	100 Ah
Energy	4.8 kWh
Working voltage range	42V - 54.5V
Ah Efficiency(%)	≥ 99%
Charging current (Standard/Maximum)	50A / 100A
Discharging current (Standard/Maximum)	50A / 100A
Dimensions (D x W x H) mm	440 x 482.6 x 133
Installation method	19” Rack Mount
Communication Interface	RS485
LED Indicator	ALM/RUN/SOC
Max. number of parallel connection	15
Cycle life (80% DOD, 25°C)	≥6000 cycles
Operating Temperature	Charging : 0°C to 60°C Discharging : -20°C to 60°C, Storage: 0°C to 40°C
Terminal	M8
Weight	40 ± 1 kg
IP Class	IP20

Amara Raja Advanced Cell Technologies Pvt Ltd (A subsidiary company of Amara Raja Energy & Mobility Limited)
Manufacturing Facility: M/S. Amara Raja Advanced Cell Technologies Pvt Ltd, Plot No. 1, Sy. Nos. 556 & 607, Mahabubnagar Urban Mandal, New Energy Park, Divitipally Village, Telangana, India 509001.
Corporate Office: Terminal A, 1-18/1/AMR/NR, Nanakramguda, Gachibowli, Hyderabad - 500032, Telangana, India.

Dimensional Overview of Battery Pack

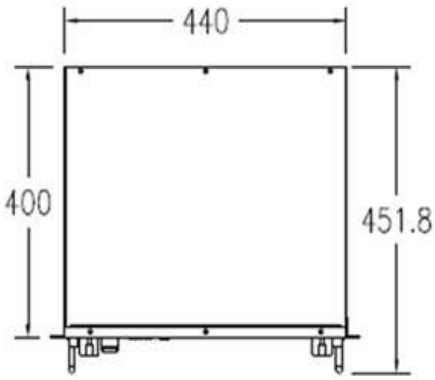

TOP VIEW

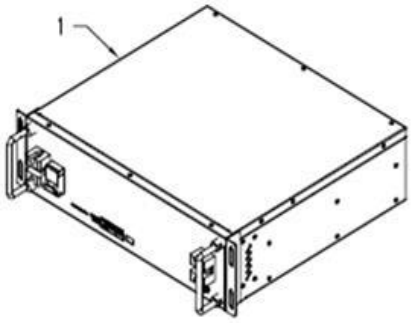

ISO VIEW

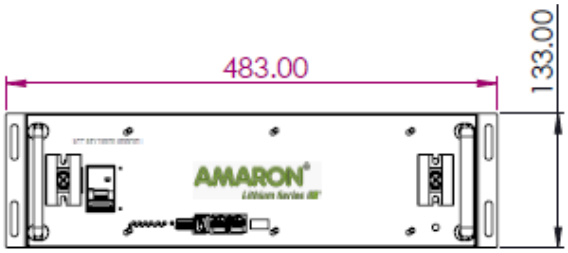

FRONT VIEW

Discharge Performance

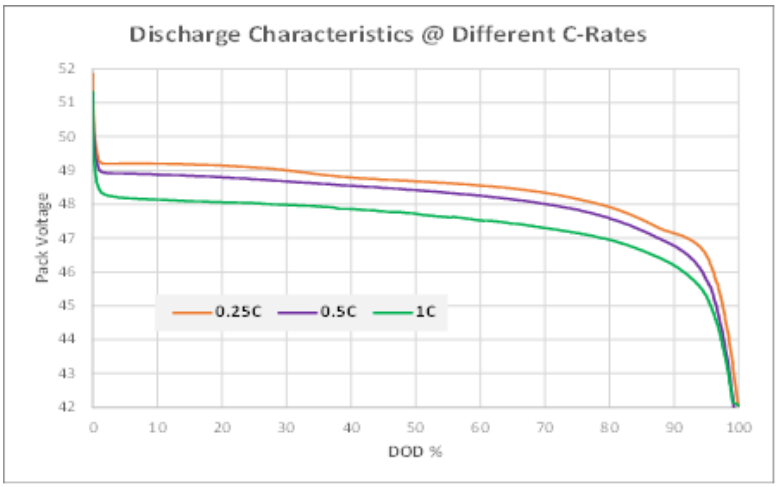

Charge Performance

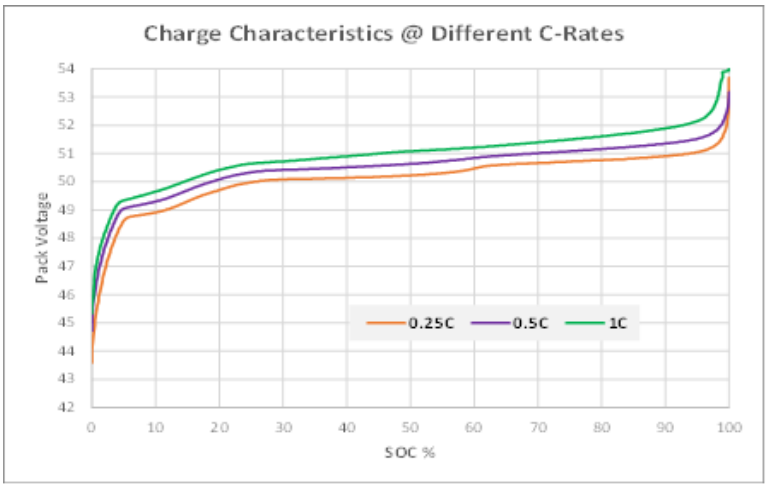

Amara Raja Advanced Cell Technologies Pvt Ltd (A subsidiary company of Amara Raja Energy & Mobility Limited)
Manufacturing Facility: M/S. Amara Raja Advanced Cell Technologies Pvt Ltd, Plot No. 1, Sy. Nos. 556 & 607, Mahabubnagar Urban Mandal, New Energy Park, Divitipally Village, Telangana, India 509001.
Corporate Office: Terminal A, 1-18/1/AMR/NR, Nanakramguda, Gachibowli, Hyderabad - 500032, Telangana, India.