

AMARA RAJA ENERGY & MOBILITY LTD
PROFILE

Amara Raja Group
Growing Bigger & Better Everyday

Best Workplaces™ Building a Culture of Innovation by All — Great Place To Work. INDIA 2024

AMARA RAJA
Gotta be a better way

6 Companies

17 Businesses

Turnover
$ 2.0 Billion

Over
17,000 Employees

- Amara Raja Energy & Mobility
  - Amara Raja Advanced Cell Technologies
  - Amara Raja Power Systems
  - Amara Raja Circular Solutions
- Amara Raja Electronics
- Amara Raja Infra
- Mangal Industries
- Amara Raja Media
- R N Galla Family
  - Galla Foods



Key Milestones

AMARA RAJA
Gotta be a better way

1985

Amara Raja Batteries and Amara Raja Power Systems started by Dr. R.N. Galla





Collaboration with GNB for launching VRLA technology in India that replaced flooded batteries

1988

1997

ARE&M diversified into automotive batteries & signed JV for technological collaboration with world leader in batteries.

Johnson Controls



Path breaking zero maintenance Amaron automotive batteries launched

2000

2005

Food processing business, Galla Foods launched to benefit local farmers





Amara Raja Infra is incorporated to reliably undertake the group's growing Infra needs

2008

2015

Amara Raja Growth Corridor, a 500 Acre Industrial Park with modern infrastructure inaugurated





Amara Raja Electronics commences EMS business for industrial, automotive and consumer segments

2016

2017

State of the art plastic injection molding facility started at Mangal Industries to address needs of automotive industry





ARE&M commences work on 16 Gwh Li-ion Gigafactory for cell manufacturing and battery pack assembly.

2023

AMARA RAJA ENERGY & MOBILITY LTD- A FLAGSHIP COMPANY

(Existing Lead Acid Business Overview)

AMARA RAJA
Gotta be a better way

Automotive Batteries	Industrial Batteries

Leading Automotive Battery Brand

Largest Exporter of 4W Batteries in India

19 mn- 4W Batteries
30 mn- 2W batteries

First AGM battery manufacturer for 2W

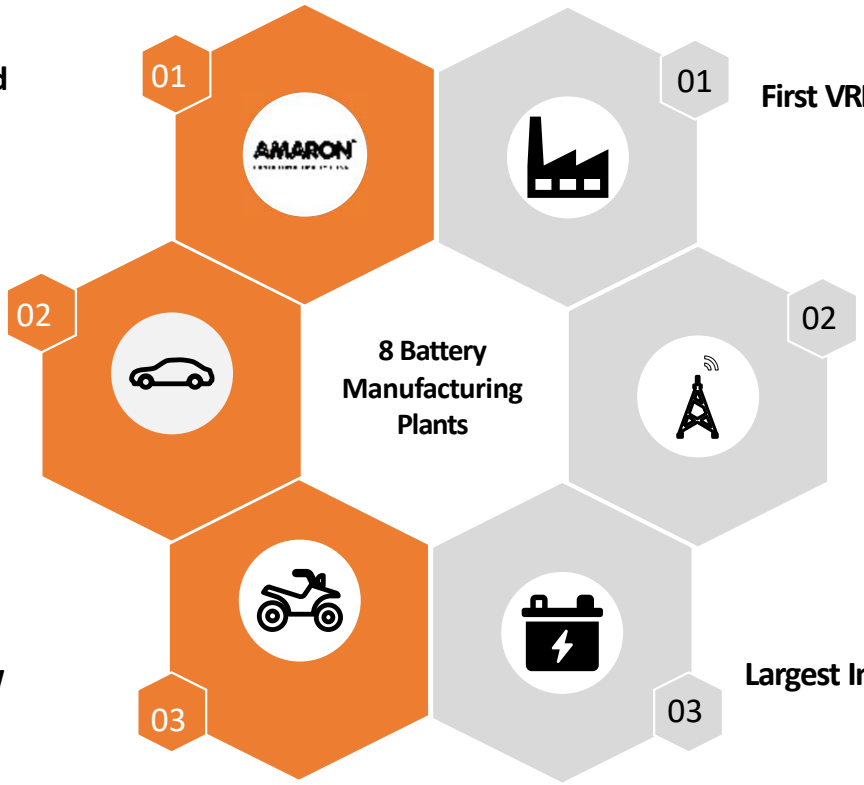

First VRLA Battery Manufacturer in India

Market Leader in Telecom

5 Mn batteries – 12 Volt & 2 Volt

Largest Integrated Facility for MVRLA Batteries

Amara Raja Energy & Mobility

(Formerly Known as Amara Raja Batteries)

AMARA RAJA
Gotta be a better way

World Class & World Scale

One of the World's Largest Integrated Lead Acid Battery Manufacturing Facilities. Leading India's New Energy transition with Li-ion cells manufacturing and R&D.

- Leading name in the battery industry for 37 years
- Largest Manufacturer of standby VRLA batteries in South Asia
- Amaron – India's No.1 aftermarket automotive battery brand, expanding presence to lubricants category as well

ARE&M Revenue (INR Crores)



LOCATION & FACILITIES

AMARA RAJA
Gotta be a better way



Located on NH- 4, Connecting **Chennai to Bangalore**,8 Kms. from Chittoor Town.

Proposed Elevated Express High Way





LOCATION & FACILITIES

AMARA RAJA
Gotta be a better way



ARE&M Application Segments & Product Range

AMARA RAJA
Gotta be a better way

Industrial

- Telecom
- UPS backup
- Power Generation units
- Railways
- Defence
- Motive

Amaron Sleek



Amaron Volt



Power Stack



Quanta



Automotive

- Passenger cars
- 3,2 wheelers
- Lubricants
- Tractors
- Trucks
- Home UPS/Inverters



Advanced Cell Technologies

- Li-ion cells manufacturing
- Li-ion battery packs
- EV chargers
- R&D in new chemistries





Focus on New Energy



- ARE&M is leading the way in Li-ion technology and R&D with subsidiary **Amara Raja Advanced Cell Technologies**
- Setting up a 16 GWh Manufacturing facility for cells and battery packs.
- Setting up E+ve Energy Labs: a unique innovation and research facility
- Developed India's First 21700 Cylindrical Cell (NMC 811)
- **1st in INDIA** to achieve IATF 16949:2016 & ISO 9001:2015 certification for Li-Ion Batteries

Preferred partner to large Conglomerates







- Among Top 2 suppliers to Auto OEs in India
- Exclusive supplier to global MNC's like FORD, Honda & Daimler India
- First to launch AGM batteries for automotive applications in India.
- Largest exporter of 4W batteries from India







- Supplier of very First VRLA Battery in India
- Installed base at ~300K Telecom Towers
- Largest supplier to Indian Telecom – 60%+ market share in LAB
- Installed base of batteries at more than 25K towers across Africa & South East Asia








- Amaron Quanta the most popular brand among UPS OEs/Users
- Supplies of 25 Mn+ batteries since inception
- Most popular Lead Acid battery for Datacenter in India (60%+ SoB)
- Initiated Supplies for Global Supplies to UPS OEM across their region of presence

Global installations 50+ Countries

AMARA RAJA
Gotta be a better way

AMARON
LASTS LONG. REALLY LONG.

POWERZONE

AMARON QUANTA

AMARON VOLT

POWERSTACK



AMARON®

QUANTA

LIFE UNINTERRUPTED

THE TOP PERFORMER ACROSS INDUSTRIAL SECTORS

- One of the World's Largest Industrial Battery Brands
- Designed for Harsh Tropical Conditions
- Quick Recharge
- Deep Cycle, Long Life
- Fit & Forget



AMARON QUANTA - JOURNEY

AMARA RAJA
Gotta be a better way

YEAR OF LAUNCH

2018
Lab & field evaluation of Stamped Grid Technology

2016
AMARON QUANTA
HWS 12V-388,440,540& 730W

AMARON QUANTA
HUPS 12V-160 & 200Ah

2015
AMARON QUANTA
12V-New 200Ah

Study and lab evaluation of Stamped Grid Technology

2013
AMARON QUANTA
12V-New 100, 120 & 150Ah

2010
AMARON QUANTA
12V-200Ah & New 65Ah

2008
AMARON QUANTA
12V-130Ah & 160Ah

2005
AMARON QUANTA
12V-84Ah

2002
AMARON QUANTA
12V-26Ah, 42Ah, 65Ah, & 100Ah









Amaron Quanta Features

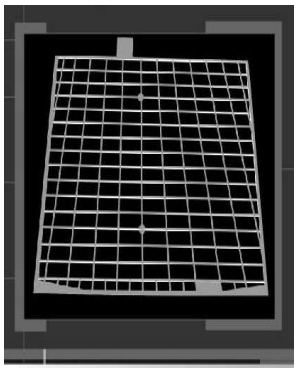



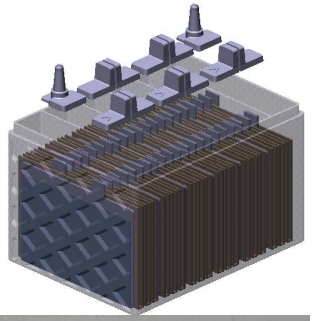







- Patented Grid Design – RADGRID
- Low Impedance path
- Proprietary Alloys
- Higher Surface areas – Instant Reaction
- Automated COS process – HRD
- Uniform Lug to strap bonding – No short circuits
- Copper Insert M8 terminal – Better conductivity
- 100% batteries pass through HRD
- High Reliability
- JIS 8702C & IEC -60896 tested &certified

Products & business segments we supply batteries for

AMARA RAJA
Gotta be a better way







UPS

DATA CENTERS

IT & ITES

MANUFACTURING

POWER UTILITIES

TRANSPORTATION

TELECOM

AMARON QUANTA HWS SERIES



Range – 380W to 730W

- Delivers upto 25% more power
- Batteries can be discharged to 1.67ecv.
- Lower IR Values offers 10% quicker recharge
- High Volumetric Energy Density offering 10% saving in room space.
- 15% High specific power results in low floor loading
- **Plus the time proven QUANTA features, advantages & Reliability**

AMARON SOLAR SERIES



Range – 26 AH to 200 AH

- Designed for deep cycling and PSOC
- Cycle life of 1500-1700 cycles at 27º C
- Lower Internal resistance offering quick recharge
- Rugged and suitable for outdoor installation
- Suitable for solar lighting, rural electrification
- **Plus proven QUANTA features, advantages & Reliability**

Recent customer recognitions

AMARA RAJA
Gotta be a better way



TMEIC
We drive industry



VERTIV

UPS - Application demands & diversification

AMARA RAJA
Gotta be a better way

Rising demand for UPS in residential & commercial sectors

Digitalization & Computerization of Govt. Offices & Agencies

Rapid Urbanization & Growth in the IT Market

Rapid rise in Data related services like cloud computing demanding more data centers

Banking & related sectors



SOHO/Mfg Ind/HealthCare/Edu





IT/ITES/Corp/Data Centers



UPS requirements continue to influence energy requirements demanding new battery designs

What does it mean for battery …..

UPS Applications



BIFS

SOHO/Mfg Ind/HealthCare/Edu

IT/ITES/Corp/Data Centers

Battery Requirements

- High Life Float & Cyclic
- High Power Performance
- Quick Recharge Capability
- Low Internal Resistance
- High Sp. Energy & Energy Density

AMARA RAJA
Gotta be a better way

So, What next for Amaron Quanta.....

One of the World's Best Plate Making Technology



POWERSTACK – THE WORKHORSE



Range – 100 AH to 6000 AH

- Over Three decades of proven performance
- Optimal design to suit Float as well as cycling usage
- Quick charging characteristics suiting Solar PV installations

AMARON VOLT – THE HIGH LIFE BATTERY



Range – 300 AH to 5500 AH

- Best in class cycle life – 6000 at 20 % DOD
- Suitable for deep cycling and Outdoor operations
- High temperature operations compatible
- Better Watt hour efficiency
- Proprietary “Perdura Grid” and “Tetracrys” paste recipe for high life

AMARON SLEEK Series



Range – 100 AH to 190 AH

- Design Float life of 12+ years
- Design to perform in high temp CDC applications
- True molded front terminal
- Integral plastic handles for ease of handling
- Quick recharge capability

AMARA RAJA

Gotta be a better way

Best Workplaces™

Building a Culture of Innovation by All

Great Place To Work®

INDIA 2024

™



AMARA RAJA
Gotta be a better way

THANK YOU

